Section 1-1

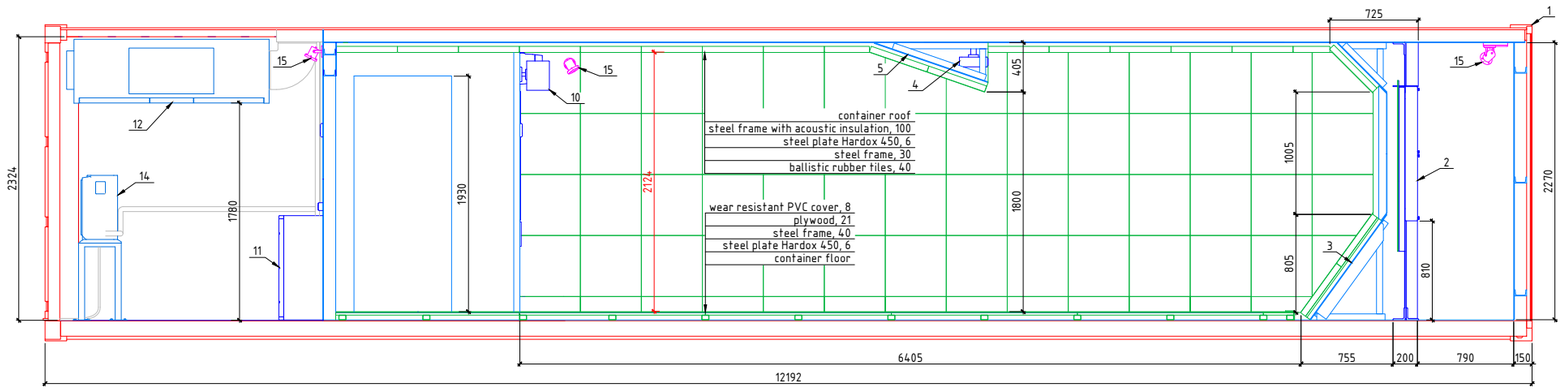

Plan

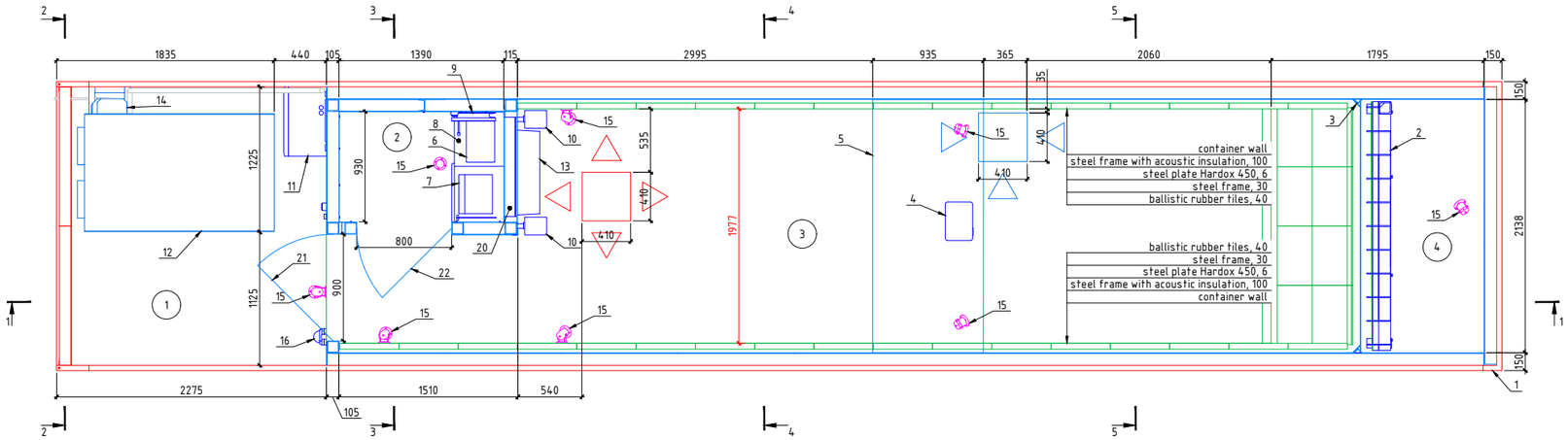

Section 2-2

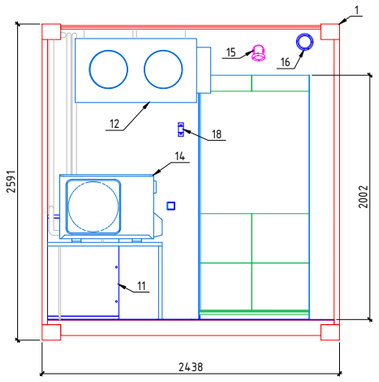

Section 3-3

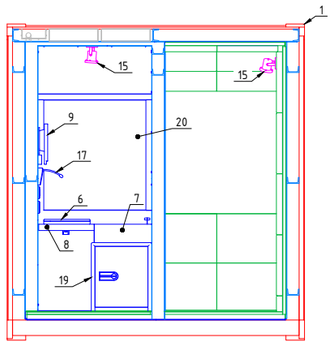

Section 4-4

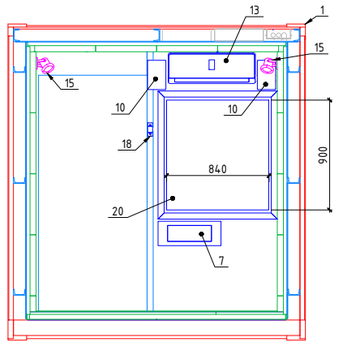

Section 5-5

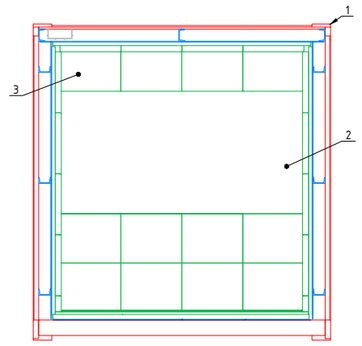

Breakdown of Premises

Premise No	Name	Area, m^2	Premise cat.
1	Utility room	5.2	
2	Rangemaster room	1.3	
3	Shooting range	15.7	
4	Space behind sensory shooting screen	1.7	

Equipment Specifications

Item	Name	Qty	Weight of a unit, kg	Note
1	40 ft Dry Shipping Container: 42G1 type, ISO 6346:1995	1	3720	
2	ARCADA LF20-10 sensory shooting screen	1	389	
3	A set of baffles ARCADA-B6, S=3.6m^2	1	240	
4	Multimedia LCD projector (1024x768, 3200 lm ANSI), bracket	1	4	
5	Ceiling baffle ARCADA-B6, S=2.1m^2	1	109	
6	Notebook: Intel Core i5 processor, 15.6-inch display, AMD Radeon R7 graphics card, 2048Mb, Windows 10, wireless mouse	1	3	
7	Front-opening counter: inner clearance 346x330x100mm	1	10	
8	Operator's table, stainless steel	1	8	
9	Professional TFT-LCD monitor: 17", 1280x1024px, 75Hz, high contrast ratio 1000:1, BNC, tempered protective glass	1	6	
10	Stereosystem 2x10W, brackets	1	9	
11	Multipurpose switchboards enclosure: IP66, IK10, GWT 750°C, UV and chemicals resistant	1	30	
12	Compact air handling unit: airflow range 360-1548 m^3/h, 230V/50Hz, F7/M5 filters	1	207	
13	Air-conditioner (inside unit): cooling capacity 2640W, heating capacity 2930W, 230V/50Hz	1	8	
14	Air-conditioner (outside unit): cooling capacity 2640W, heating capacity: 2930W, 230V/50Hz	1	27	
15	Luminaire: GU10, 25W, IP55	8	1	
16	Analog vandal-resistant dome camera: 1/3" 1.3MP CMOS sensor, 1000 TVL, IP66, IK10, operating temperature -30..+50°C	1	1	
17	Multi-directional intercom	1	1	
18	Intercom: vandal-resistant, operating temperature -40..+50°C	2	0.2	
19	Gun and ammo safe: security level S2 according to DIN EN 14450, fire resistance grade LFS 30P according to EN 15659, armored mechanical lock, volume 50l	1	77	
20	Bulletproof window	1	150	
21	Bulletproof door	1	270	
22	Bulletproof door	1	240	

Note:
1. No outside modifications of 40 ft ISO shipping container.
2. To be transported in accordance with general rules by any mode of transport.
3. Gross weight: 15420 kg.
4. Power supply: 230V/50Hz, 3.5kW (16A).

Mobile Interactive Live Fire Shooting Range ARCADA MLF

Plan , Sections 1-1, 2-2, 3-3, 4-4, 5-5

ARCADA INTERACTIVE SHOOTING SYSTEM